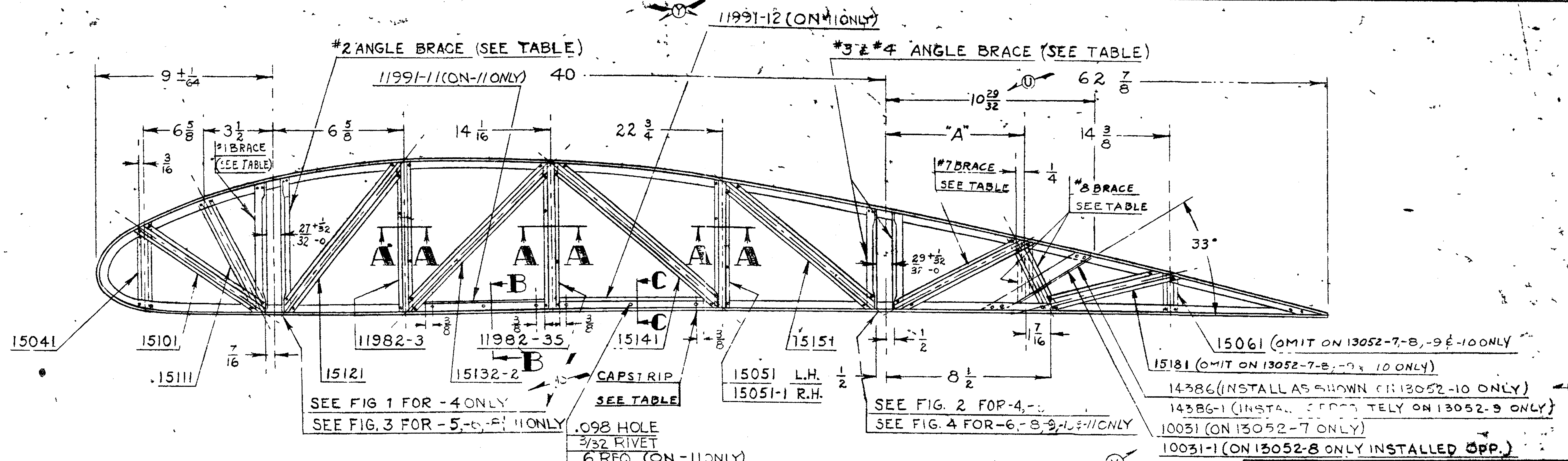
9 ±1/64
40
62 7/8
6 5/8
3 1/2
6 5/8
14 1/16
22 3/4
10 29/32
"A"
14 3/8
3/16
#1 BRACE (SEE TABLE)
27 +1/32 -0
#7 BRACE SEE TABLE
1/4
#8 BRACE SEE TABLE
29 +1/32 -0
33°
A
A
A
A
A
A
B
B
C
C
3/8
7/16
1/2
8 1/2
1 7/16
#2 ANGLE BRACE (SEE TABLE)
11991-11 (ON -11 ONLY)
11991-12 (ON -11 ONLY)
#3 & #4 ANGLE BRACE (SEE TABLE)
15041
15101
15111
15121
11982-3
11982-35
15132-2
15141
CAPSTRIP SEE TABLE
15151
15051 L.H.
15051-1 R.H.
SEE FIG 1 FOR -4 ONLY
SEE FIG. 3 FOR -5,-6,-8,-11 ONLY
.098 HOLE
3/32 RIVET
6 REQ. (ON -11 ONLY)
SEE FIG. 2 FOR -4,-5
SEE FIG. 4 FOR -6,-8,-9,-10 & -11 ONLY
15061 (OMIT ON 13052-7,-8,-9 & -10 ONLY)
15181 (OMIT ON 13052-7,-8,-9 & 10 ONLY)
14386 (INSTALL AS SHOWN ON 13052-10 ONLY)
14386-1 (INSTALL OPPOSITELY ON 13052-9 ONLY)
10031 (ON 13052-7 ONLY)
10031-1 (ON 13052-8 ONLY INSTALLED OPP.)

CUT OUT DOTTED SECTION OF BRACES AS SHOWN

CUT OUT DOTTED SECTION OF BRACES AS SHOWN

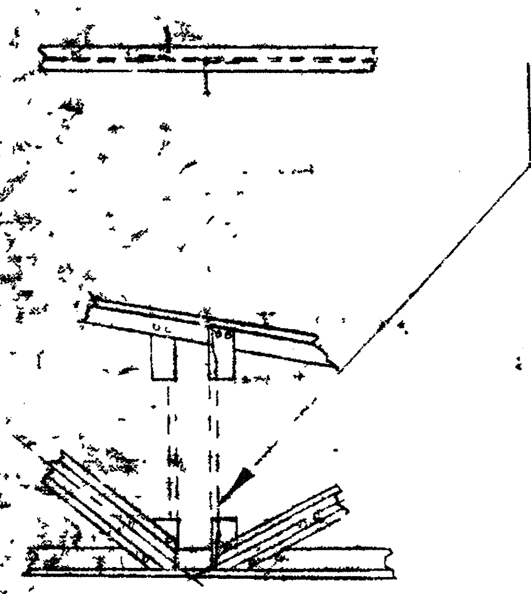

FIG. 4
#3 & #4 ANGLE BRACE
-6,-8,-9,-10 & -11 ONLY

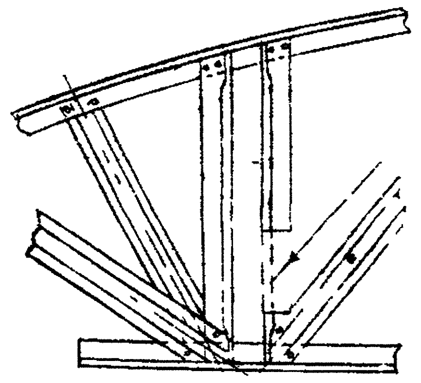

FIG. 1
#2 ANGLE BRACE
-4 ONLY

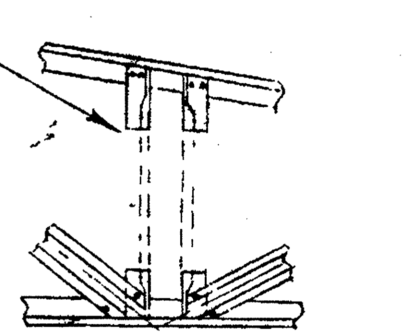

FIG. 2
#3 & #4 ANGLE BRACE
-4-5

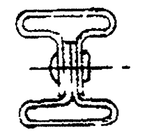

SECTION B-B
FULL SIZE

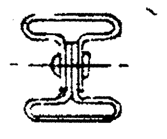

SECTION C-C
FULL SIZE

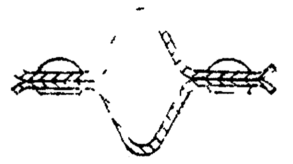

SECTION A-A
TWICE SIZE

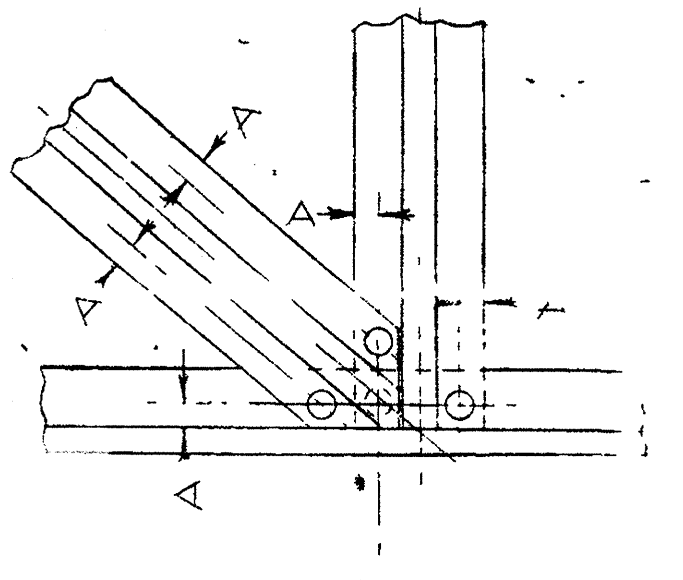

A = 1/8 MIN.
TYPICAL JOINT
FULL SIZE

CUT OUT DOTTED SECTION OF BRACES AS SHOWN

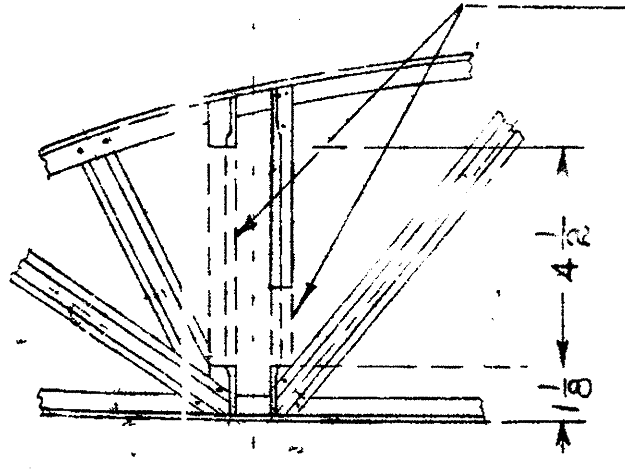

FIG. 3
#1 & 2 ANGLE BRACES
-5,-6,-8,-11 ONLY

ASSY. NO.	#2 BRACE	#3 BRACE	#4 BRACE	#7 BRACE	#8 BRACE	CAP STRIP	A DIM.	#1 BRACE
13052-2	15201	15211	15221	15151	15171	[illegible]	7	15191
13052-3	15201	15231	15241	15161	[illegible]	15252	7	15191
13052-4	15321	16141	16151	15161	15171	15252	7	15191
13052-5	15321	16141	16151	15161	15171	15252	7	15311-3
13052-6	15321	16141-1	16151	15161	15171	15252	7	15311-3
13052-7	15201	15211	15221	15991	16011	15262	6 11/16	15191
13052-8	15321	16141-1	16151	15991	16011	15262	6 11/16	15311-3
13052-9	15201	16141-1	16151	15991	16011	15262	6 11/16	15191
13052-10	15201	16141-1	16151	15991	16011	15262	6 11/16	15191
13052-11	15321	16141-1	16151	15161	15171	15252	7	15311-3
13052-12	15321	16141	16151	15161	15171	15252	7	15311-3

NOTES: 1. ALL RIVETS 3/32 (.098 HOLE).
2. FOR WING FULL RIB OUTLINE SEE DRAWING 13814.

SEP 11 1963

PART NO.	NO. REQ.	SIZE / MATERIAL	DESCRIPTION
11991-12	1	CAPSTRIP	-11 ONLY
11991-11	1		-11 ONLY
14386-1	1	FORMER	-9 ONLY
14386	1		-10 ONLY
10031-1	1	FORMER	-8 ONLY
15262	1	CAPSTRIP	-7-8-9 & 10 ONLY
16011	1	BRACE	-7-8-9 & 10 ONLY
15991	1		-7-8-9 & 10 ONLY
10031	1	FORMER	-7 ONLY
16141-1	1	#3 ANGLE BRACE	-6-8-9-10 & 11 ONLY
16151	1	#4 ANGLE BRACE	[illegible] -9-10-11 ONLY
15241	1		-3 ONLY
15221	1		-2 & -7 ONLY
[illegible]			-4-5 ONLY
15231	1	#3 ANGLE BRACE	-3 ONLY
15211	1		-2-7 ONLY
15321	1	#2 ANGLE BRACE	[illegible] -6-8 -11 ONLY
15201	1		[illegible]
13814	DWG REF ONLY	WING FULL RIB OUTLINE	
	79	3/32 X 9/64 L. 5/32 DIA. HD.	STL. TUBULAR CAD. PLATED RIVET
15252	1	CAPSTRIP	ON [illegible] -6 -11 ONLY
15191 15311-3	1 1	#1 ANGLE BRACE	ON -2-3-4 [illegible] ON -5-6-8-11 [illegible]
15181	1	#9 DIAGONAL BRACE	[illegible]
15171	1	#8 DIAGONAL BRACE	[illegible]
15161	1	#7 DIAGONAL BRACE	[illegible] ONLY
15151	1	#6 DIAGONAL BRACE	
15141	1	#5 DIAGONAL BRACE	
15132-2	1	#4 DIAGONAL BRACE	
15121	1	#3 DIAGONAL BRACE	
15111	1	#2 DIAGONAL BRACE	
15101	1	#1 DIAGONAL BRACE	
15061	1	#5 VERTICAL BRACE	[illegible] ONLY
15051-1	1	#4 VERTICAL BRACE	
15051	1		
15041	1	#1 VERTICAL BRACE	
11982-35	2	#3 VERTICAL BRACE	
11982-3	2	#2 VERTICAL BRACE	

SCALE 3 IN. = 1 FT. & NOTED
TOTAL WT.–LBS.
FINISH–PIPER SPECIFICATION #10
MANUFACTURING PRACTICES–PIPER SPECIFICATION #9

Z	-11 REM. FROM FIG 3 & ADD TO FIG 4. 16141-1 WAS 16141 FOR -11	11-7-6?	EFM
AA	-12 & 15311-3 ADD.	5-15-?	HMK
AB	-12 CANC. 15311-3 WAS 15191	6-16-?	BCC
AC	AT -5-6 & -8 15311-3 WAS 15191	8-25-?	BCC
AD	-11 ADDED TO FIG 3 -6 & -8 REM FROM SEE FIG 1 E-6 & -8 ADD TO SEE FIG 1	1-17-63	C.E.
[illegible]	[illegible]	3-12-41	RLW
Q	-4 ASSY #2 ANGLE BRACE [illegible] WAS [illegible]	10-11-46	L.R.
R	-5 & FIG. 3 ADDED	11-1-47	H.K.
S	-5, FIG 4 & 16141-1 ADDED	2-9-49	K.D.
T	-7 & -8 ADDED. TABLE REV.	1-4-50	J.O.
U	10 29/32 WAS 10 25/32	1-24-50	MC
V	10031-1 WAS 10031 FOR -8 -6 & -8 ADDED TO FIG. 3 -6 & -8 REMOVED FROM FIG. 1	9-14-50	C.K.
W	9,-10, 4?? 43/64 ADDED	5-14-54	W.H.
X	RIVET SPEC. REV.	1-20-55	HMK
Y	SECT. B-B, SECT C-C, 11991-11, 11991-12, ATTACH. & -11 ADD.	8-19-60	E.M.

THIS DRAWING IS THE PROPERTY OF THE PIPER AIRCRAFT CORP. AND ITS POSSESSION BY UNAUTHORIZED PERSONS SHALL NOT BE CONSTRUED AS PERMISSION TO REPRODUCE FOR SALE IN WHOLE OR IN PART ANY DEVICES SHOWN THEREON

MODEL	PER PLANE	NEXT ASSEMBLY	SUPERSEDES	SUP. BY
NOTED	NOTED	NOTED		

RIB ASSEMBLY
WING FULL

PIPER AIRCRAFT CORP.
LOCK HAVEN, PENNA.

C.W.
3-2-41

13052